Design and Realization of an Interactive Multi-Touch Table

Dominik Schmidt
Lancaster University
schmidtd@comp.lancs.ac.uk

February 27th, 2009

Abstract

In this technical report, we describe the design and realization of an interactive multi-touch table as reliable and flexible research platform. The taken design decisions are derived from before identified functional and non-functional requirements. The building process is described in detail including illustrations and photos and is supported by engineering drawings and parts lists.

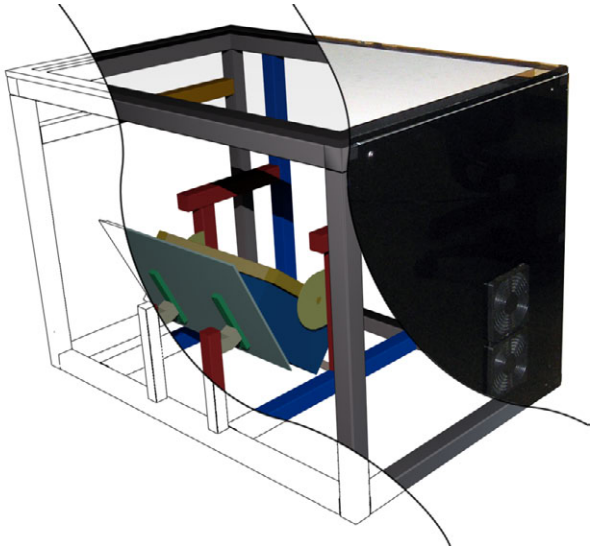

Contents

Chapter 1

Requirements

Our goal in designing and building this multi-touch table was to create a reliable and flexible environment to develop and evaluate multi-touch interactions and applications on horizontal surfaces. In specific, we aim at developing and evaluating interactions and application which deal with new ways of multi-touch and multi-user input. In addition, the integration of electronic devices such as mobile phones or cameras is an essential part of the research this table will be used for. Keeping these application areas in mind, the relevant requirements to be realized shall be derived in the following.

1.1 Functional Requirements

- **Finger and marker tracking:** The system must be able to track an unlimited number of fingers on the surface and to recognize visual markers.
- **Around the table interaction:** The system must be designed in a way which allows equal access to the surface from all sides.
- **Screen size and resolution:** The system's active surface must have a diagonal of at least 100cm with an output resolution around 30dpi.
- **Table height:** The system's minimum height must be around 70cm to allow to be used while seated. Moreover, the height must be adjustable to support standing applications.
- **Software:** The system's hardware must be supported by the open source library touchlib to facilitate development.

1.2 Non-Functional Requirements

- **Extensible and flexible:** The system must be designed in a way which allows later extensions—such as different projection or recognition hardware—

to be incorporated easily. Furthermore, it must be possible to disassemble and assemble the system.

- **Reliable:** The system must be build in a way which renders it suitable for ongoing research usage. In particular, it must withstand user studies.
- **Cost-efficient off-the-shelf components:** The components used in the system must be available off-the-shelf.
- **Completion in a timely manner:** The system must be planned and built withing four months time.

Chapter 2

Design Decisions

Based on the above identified requirements we took the following design decisions with regard to the table's different elements.

2.1 Functional Principle

In order to be cost-efficient and to build upon existing experience, we decided for a rear-projection-based system with a visual touch detection. In particular, we chose to use a diffused illumination (DI) principle which allows for optical marker detection in contrast to the also widely used frustrated total internal reflection (FTIR) principle (further details about these techniques can be found in chapter 4). Nevertheless, due to the similar underlying principle, our system is able to support FTIR with only minor modifications required.

2.1.1 Input

A Point Grey Firefly MV camera with a resolution of 640 $\times$ 480px at 60fps is used to capture the input. We chose to mount the camera below the surface center, pointing straight upwards, i.e. without using a mirror (it is not possible to use the projection mirror for the camera since the mirror's angle is adjusted to fit the projector's lens shift). Therefore, we have to use a wide angle lens in order to capture the entire surface. The camera is equipped with an infrared band pass filter which blocks visible light.

2.1.2 Illumination

We use four 850nm infrared illuminators as main light sources. Each of them holds 99 LEDs and operates at 12V, making it straight forward to connect them to a standard PC power supply unit. They are mounted in the four corners, pointing downward, making the light bounce of the floor and walls to achieve a uniform light distribution. In areas without sufficient illumination from the

main light sources, supporting infrared illuminators consisting of three LEDs each are used.

2.1.3 Output

As space in the table box is limited, the distance between the projector and the projection surface is respectively short as well. In general, it is possible to use several mirrors to reduce the required height of the table by folding the projection path. However, the more mirrors are used the more complicated the setup gets as mirrors must not interfere with the projected image and need to be adjusted carefully in order to produce an undistorted image. Keeping the design as simple as possible, we decided for a short throw projector which enabled us to use one mirror only at a table height of approximately 70cm.

The projector we chose is a Toshiba TDP-EW25 with a resolution of 1280 × 800px, an aspect ratio of 16:10, and a low latency of 16.67ms or less [2], being capable of producing an image of 107cm in diagonal at approximately 30dpi (resulting in a 91x57cm picture) at a distance of only 51cm. Furthermore, we chose a first surface mirrors which has the reflective material directly on its surface, unlike conventional mirrors which are usually protected by a sheet of glass resulting in unwanted ghost images due to double reflection.

2.2 Structure

The frame is constructed using the Aluminum profile system manufactured by *Bosch Rexroth*, making a robust and durable main structure to support all other elements. Given the system's modularity with its different strut types and variety of connection elements, it is straight forward to assemble arbitrary constructs. The profiles provide plenty of possibilities to attach further elements. All interior parts (such as camera, illuminators, and projector for example) are mounted using elements provided by this system. Last but not least, the resulting structures can be taken apart for transport.

We decided for the 40x40mm profiles to be used in building the main frame and most of the supporting structures to provide the table with a solid foundation. In addition, we constructed some of the mountings using 30x30mm profiles to reduce the space taken up by the structures.

2.3 Walls & Surface

We use acrylic sheets of different dimensions, thicknesses, and colors for the actual surface and for the walls since they are easy to process and relatively light-weight. While 3mm black acrylic boards sheets are used for the walls, a clear sheet of 10mm in thickness is used for the actual surface.

Chapter 3

Realization

This chapter illustrates the realization of the presented multi-touch table and describes the used parts. In doing so, it roughly follows the actual building process. Although we focus on DI, this setup can be used for FTIR with minor modifications only. For a complete set of detailed engineering drawings and a summarized list of components please refer to the appendix (page 18).

3.0.1 Main Structure

Quantity	Item	Function
4	40x40L profile, 660mm	legs
4	40x40L profile, 910mm	top/bottom frame
4	40x40L profile, 570mm	top/bottom frame
4	40x40L profile, 180mm	leg extension
4	40x40 3 way cubic connector	top frame
8	D17 bolt connector	bottom frame
4	Hinged foot	leg extension
4	40x40 end connector	leg extension

Table 3.1: Parts list for main structure

The main structure consists of four legs, a top and a bottom frame (compare figure 3.1(a)). Table 3.1 lists the required profiles and connectors. At the top, four 3 way cubic connectors hold together the frame, requiring three core screws each. At the bottom, we use two bolt connectors for each corner. By using this type of connector it is possible to attach leg extensions, feet, or coastings to the end of the legs. Moreover, bolt connectors offer the strongest connection available in this system and are insertable at any position, even if the profile's groove is not accessible at the ends. On the downside, 17mm holes need to be drilled into the aluminum profiles which requires a powerful drill. The installed connectors can be seen in figure 3.2.

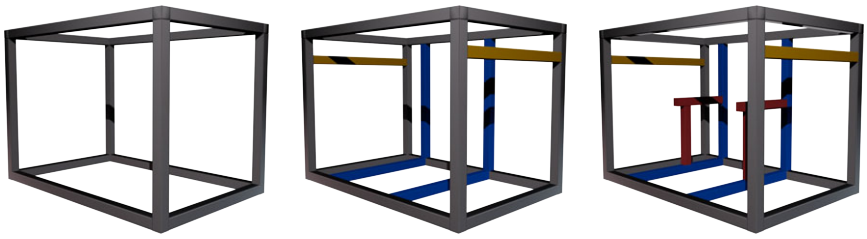

(a) Main structure

(b) Supporting structures for illuminators (orange) and projector (blue)

(c) Projector support mount (red)

Figure 3.1: Main and supporting structures

Leg Extensions

Figure 3.2(c) shows a leg extension attached to the main structure, increasing the table's height and hence enabling the useage in a standing position. Four end connectors are used to connect legs and extension profiles. The feet are then screwed into the extensions.

(a) Top: cubic connector

(b) Bottom: bolt connectors

(c) Leg extension

Figure 3.2: Connectors for main structure

Note: Do not completely tighten all connectors before inserting and adjusting the supporting structures described in the following section.

3.0.2 Supporting Structures

Figure 3.1(b) depicts the main frame with added supporting structures to hold IR illuminators and the projector; the required components are listed in table 3.2. While bolt connectors fix the projector mount, brackets are used for the IR mounts (compare figure 3.3).

Quantity	Item	Function
2	40x40L profile, 570mm	IR mounts
2	40x40L profile, 570mm	projector mount, horizontal
2	40x40L profile, 620mm	projector mount, vertical
8	D17 bolt connector	projector mount
4	40x40 bracket with fittings	IR mount

Table 3.2: Parts list for supporting structures

(a) IR mount: brackets

(b) Projector mount: bolt connectors

Figure 3.3: Connectors for supporting structures

3.0.3 Projector

Quantity	Item	Function
4	40x40L profile, 300mm	projector support mount
2	30x30L profile, 300mm	projector frame
3	30x30L profile, 338mm	projector frame
2	D17 bolt connector	projector support mount, horizontal
4	Quick connector 10mm	projector support mount, vertical
6	Quick connector 8mm	projector frame
2	Swivel fastening	frame mount connection
3	M4 T nut 8mm	frame projector connection
3–6	M4 washer	frame projector connection
3	Cap screw M4x40	frame projector connection
1	Toshiba TDP-EW25	projector
1	Hot mirror, 120 × 80mm	IR block

Table 3.3: Parts list for projector mount

As shown in figure 3.1(c), an additional mount structure for the projector is added. While the horizontal profiles are attached to the frame using bolt connectors, the vertical profiles use quick connectors which allow the projector to be moved back and forth easily in order to adjust the image[1].

In this setup, we use the Toshiba TDP-EW25 short-throw projector. A frame constructed of 30x30L profiles and quick connectors is attached to the projector's bottom using M4 screws of 40mm length; three holes have to be drilled into the frame's profiles, matching the projector's screw holes. The screws are held by M4 T nuts on the frame's top; washers might be required. The projector is then mounted upside down by connecting the frame to the mount structure using two swivel fastenings which allow to adjust the projector's angle (compare figure 3.4). The hot mirror is attached right in front of the projector lens using poster glue.

3.0.4 Camera

An IR band-pass filter blocks visible light emitted by the projector and coming from the environment. We use an approximately 1mm thick acrylic filter which can easily be cut by using a sharp knife to scratch the edges and then bending the acrylic carefully until it breaks. Using this approach, we made a 3 × 4mm filter to fit in between the glass protecting the camera's sensor and the lens. The filter is fixed with a piece of adhesive tape in order to avoid sliding (compare figure 3.5).

[1] This direction of movement is crucial as the Toshiba TDP-EW25 projector is not equipped with an optical zoom.

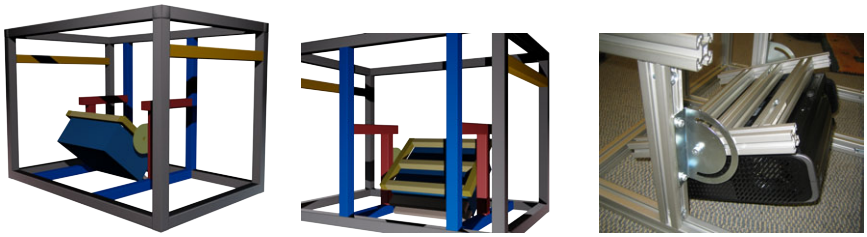

(a) Front (b) Back (c) Side

Figure 3.4: Projector mounted

Quantity	Item	Function
1	11x20 profile, 85mm	camera mount
1	30x30 joint with fastenings	camera mount
1	Inner bracket 10mm with fixings	camera mount
1	Point Grey Firefly MV	camera
1	Varifocal 1.8-3.6mm lens	lens
1	IR band-pass filter 850nm	visible light block

Table 3.4: Parts list for camera mount

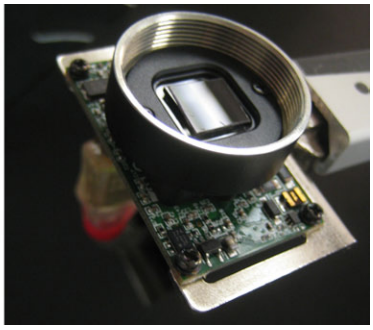

Figure 3.5: IR band-pass filter

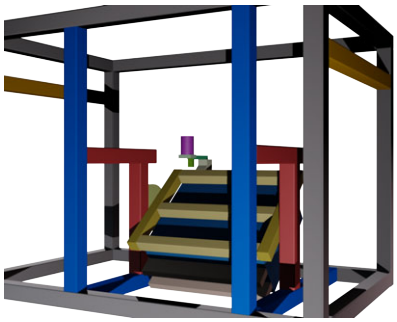

(a) Overview

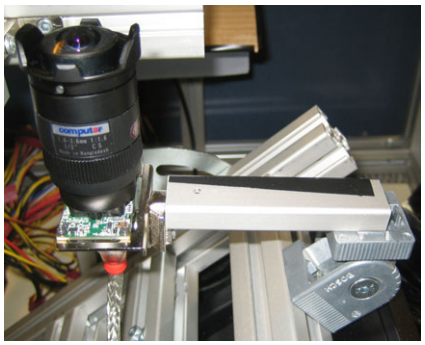

(b) Detail

Figure 3.6: Camera mounted on top of projector

As the camera needs to be centered below the surface, it is mounted on top of the projector (compare figure 3.6). A 30x30 joint connects a 11x20 profile of 85mm in length to the projector frame, allowing to adjust the camera's angle. We use an inner bracket to connect the camera tripod mount to this thin profile.

3.0.5 Mirror

Quantity	Item	Function
2	30x30L profile, 220mm	mirror mount
2	11x20 profile, 200mm	mirror mount
1	Acrylic sheet, 420 × 297 × 3mm	mirror mount
4	Inner bracket 8-10mm with fixings	frame mount connection
2	30x30 joint with fastenings	mount acrylic connection
1	Mirror fixing kit	acrylic mirror connection
1	First surface mirror, 400 × 280 × 3mm	mirror

Table 3.5: Parts list for mirror mount

A first surface mirror with a size of 40x25cm is used. It is mounted on a 3mm acrylic board using mirror brackets. Two 11x20 profiles are screwed to this board which allows for an easy connection to the joints, which are in turn connected to two 30x30L profiles fixed to the main frame. As we use inner brackets Figure 3.8 shows the mirror mount in detail, figure 3.7 the frame with installed projector, camera, and mirror.

The exact position and orientation of projector and mirror which produce an undistorted image for the given surface were determined experimentally: As the projector's properties are known, an illustration can be drawn depicting the projector and the projection frustum. Cutting out this illustration allows the frustum to be folded at arbitrary positions in order to minimize the overall

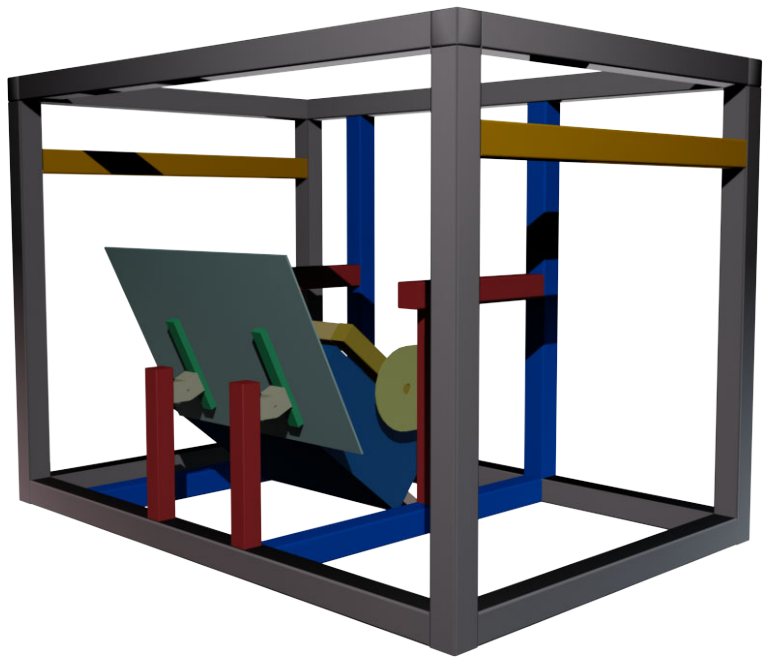

Figure 3.7: Frame with projector, camera, and mirror installed

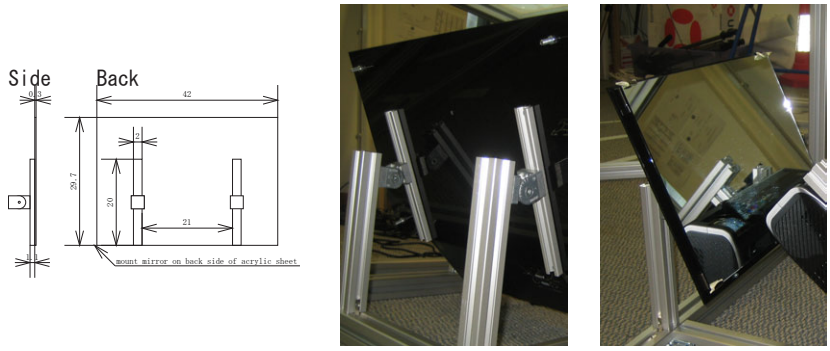

(a) Drawing (b) Back (c) Front

Figure 3.8: Mirror mount

height while still fitting everything into the box. The mirror has to be positioned where the illustration was folded. Note that this method only produces valid angles, i.e. angles that result in an undistorted projection. Figure 3.9 shows the final adjustment of projector and mirror.

Note: The inner brackets connecting mirror mount and main frame require the profile's grove to be accessible at the end.

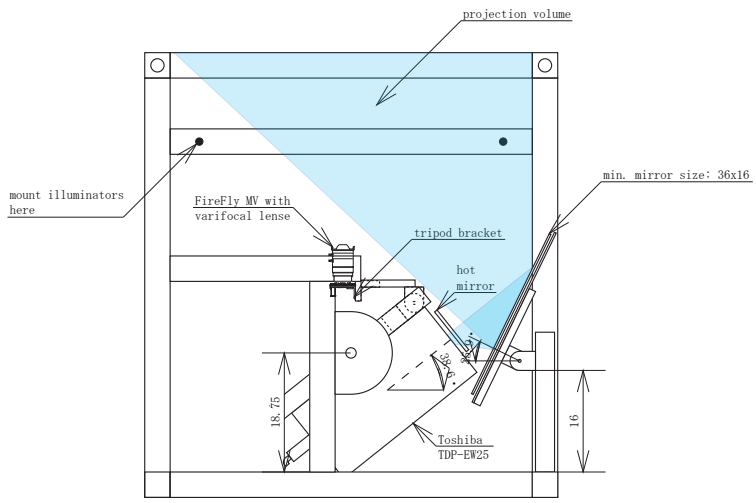

Figure 3.9: Position and orientation of projector and mirror

3.0.6 Illumination

Quantity	Item	Function
12	M5 T nut 10mm	illuminator mount
12	Cap screw M5x16	illuminator mount
4	IR illuminators, 99 LEDs, 850nm	main illuminators
12	IR LEDs, 850nm	additional illuminators
1	Acrylic sheet, 3mm	additional illuminators
8	Fan power power connectors	current supply
1	Wire lead	current supply

Table 3.6: Parts list for illumination

DI requires an uniform infrared illumination of the surface's bottom side. However, it can be challenging to achieve this uniformity. Since the acrylic surface is shiny, light sources are reflected and hence visible to the camera,

creating bright areas—or hotspots—where no recognition is possible. To avoid this effect, the light sources have to be placed in a way which illuminates the surface indirectly by bouncing the light off the floor or walls using appropriate surface materials (compare figure 3.10(a)).

As the illuminators are equipped with a light sensor to automatically switch them on and off and this behavior is not wanted, either the sensor has to be disabled which involves opening the case or it has to be covered, using some black tape e.g. The illuminators are mounted in the four corners using the supplied brackets and M5 screws and T nuts, at approximately 50cm distance to the floor, pointing downwards.

(a) Main illuminator

(b) Additional illuminator

Figure 3.10: IR illuminators

The four main illuminators produce a fairly uniform illumination. However, since the illuminators point downwards and the light is reflected upwards, the illuminators' housings cast shadows in the corners. In order to also illuminate the corners, we constructed four small supporting infrared illuminators. Consisting of three infrared LEDs mounted on a small acrylic board, each of them points in a different corner (compare figure 3.10(b)). They are held by a several wires twisted together which allows to adjust them easily. Since they are not positioned directly below the surface but close to the walls, their light sources are in general not visible for the camera. In cases where they are visible – through a reflection in the mirror e.g. – we added small pieces of black cardboard to block the camera's direct view on the light source. Using theses additional infrared spot lights we were able to also illuminate the corners, resulting in an uniform illumination for the whole surface.

Main and additional illuminators are equipped with standard disc driver power connectors which allows them to be easily connected to the PC power supply unit.

Quantity	Item	Function
24	M4 T nuts 10mm	wall mount
24	Machine screw M4x12	wall mount
16	Cap screw M4x40	fan mount
16	M4 nut	fan mount
1	Polyester film matt, 1270 × 20	diffuser
4	Fan 120mm	ventilation
4	Dust filter 120mm	outer fan protection
4	Fan guard 120mm	inner fan protection
4	Cardboard sheet, A1, white	wall cover
2	Cardboard sheet, A1, black	floor cover

Table 3.7: Parts list for walls & surfaces (general)

Quantity	Item	Function
1	Acrylic sheet, clear, 1290 × 950 × 10mm	surface
2	Acrylic sheet, 650 × 700 × 3mm	wall
2	Acrylic sheet, 996 × 700 × 3mm	wall

Table 3.8: Parts list for walls & surfaces (option I)

Quantity	Item	Function
1	Acrylic sheet, clear, 940 × 600 × 10mm	surface
2	Acrylic sheet, 650 × 710 × 3mm	wall
2	Acrylic sheet, 996 × 710 × 3mm	wall
2	Acrylic sheet, 990 × 10 × 10mm	rim
2	Acrylic sheet, 630 × 10 × 10mm	rim
2	Acrylic sheet, 910 × 40 × 3mm	rim
2	Acrylic sheet, 650 × 40 × 3mm	rim

Table 3.9: Parts list for walls & surfaces (option II)

3.0.7 Walls & Surface

Surface option I consists of a large acrylic sheet laying on top of the main frame, overlapping on each side and hence providing a border. Surface option II uses a smaller acrylic sheet which does not overlap the frame. It is covered by an additional rim which can optionally be used to house IR LEDs for a FTIR setup. The rim is assembled from acrylic sheets which are glued together as shown in figure 3.11. Please refer to figure C.2 on page 23 in the appendix for detailed information about the rim construction. The diffuser is put on top of the acrylic surface and fixed with adhesive tape.

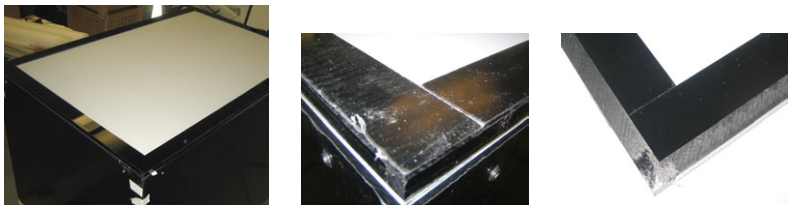

(a) Ensemble (b) Top (c) Bottom

Figure 3.11: Rim (option II)—made of glued acrylic sheets

Four fans are installed, also shown in figure C.2. The 12cm fans—two on each small side—are equipped with a dust filter on the outside and a fan guard on the inside. In order to mount the fans to the acrylic walls, a router was used to cut holes into the acrylic. One pair of fans sucks in the air while the other pair (the one closer to the projector) extracts it.

The walls are attached to the main frame using six M4x12 screws and M4 T nuts each. The floor is covered with black cardboard, diffusing the infrared light without creating a bright reflection. White cardboard is used to cover the walls in order to further distribute the light.

3.0.8 Infrastructure

Quantity	Item	Function
1	PC powers supply unit (PSU)	powering IR and fans
1	Zalman fan controller	driving fans
2	Brackets	PSU mount
2	Inner bracket 10mm with fixings	fan controller mount

Table 3.10: Parts list for infrastructure

In order to supply the IR illuminators and the fans with power, we use a standard PC power supply unit which provides several 12V connectors, among others. It is attached to the main frame using simple metal brackets. A Zalman

fan controller supplies the four fans with power and would sound if they failed. We use two inner brackets to mount the controller to one of the interior profiles. Figure 3.12 shows the complete setup.

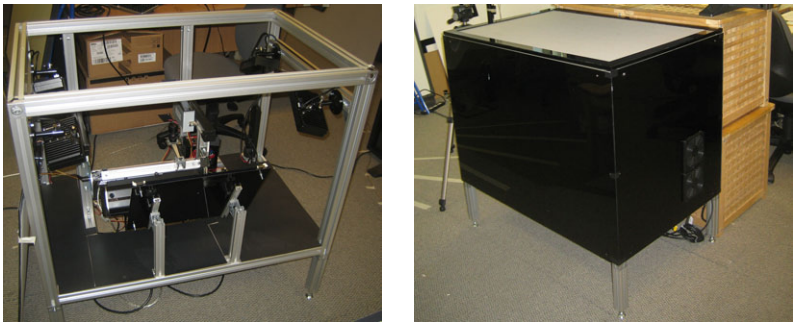

(a) Without walls and surface (b) Closed

Figure 3.12: Complete setup with leg extensions

Chapter 4

Conclusions

In this report, we described in detail the design and realization of an interactive multi-touch table as a reliable platform for interaction research on horizontal surfaces. This table has been in use for several months in various research projects. From the experiences gathered so far, we derived the following areas of possible improvement.

- **Connectors:** In order to avoid drilling large holes into the aluminum profiles and hence facilitate the construction process, an alternative to bolt and quick connectors can be used.
- **Surface:** Due to its weight the surface does not slide. However, it is currently not fixed to the frame which would be necessary in a more permanent setup.
- **Diffuser:** Although the diffuser used performs well, the diffusing layer is rubbed off after longer usage. Moreover, it is not waterproof.
- **Walls:** Attaching the walls with six screws each is rather cumbersome and requires the respective holes to be drilled accurately. A different fixing mechanism would be desirable.

In summary, the presented design serves its purposes well and provides a flexible platform for ongoing research.

Appendix A

Input Technologies

A.1 Direct Illumination

In this first approach, we use a direct illumination (DI) technique in order to track fingers and detect markers. The acrylic surface, covered with a diffuser, is illuminated from behind using infrared light. Fingers and objects on top of the surface reflect the light and thus become visible for the camera pointing at the surface from below. An infrared band pass filter ensures that the camera only sees infrared light and that visible light sources—such as the projector or light sources in the environment—cannot be seen by the camera and hence do not interfere with the recognition task.

A.2 Frustrated Total Internal Reflection

Frustrated total internal reflection (FTIR) [1] is another approach commonly used for multi-touch detection. Here, infrared LEDs are mounted along the surface's sides and shine into the surface. Given that a suitable angle was chosen the emitted light is totally reflected and does not leave the surface. Only when a finger comes close enough light escapes and it becomes visible to the camera as a bright dot.

A.3 Comparison

While FTIR enables fast and accurate finger tracking due to the bright spots caused by contact with the surface, it is not capable of object or marker detection. Furthermore, finding a suitable surface which actually allows the effect to appear and providing a smooth finish that is pleasant to touch at the same time is challenging. DI only needs a simple diffuser. Achieving a uniform illumination of the surface is can be challenging, though.

Appendix B

Tools & Consumables

The following tools and consumables are required during the table assembly:

- 11mm/17mm drills and 8mm/10mm and drill jigs (to drill holes for quick and bolt connectors)[1]
- Compound mire saw (to cut aluminum profiles if not ordered pre-cut)
- Jigsaw (to cut acrylic sheets for additional illuminators)
- Router (to cut holes into acrylic for fans)
- Offset screwdriver T50 (to fasten the cubic connectors' core screws)
- Soldering iron (to build additional illuminators and attach power connectors)
- Acrylic glue (to assemble the surface rim)
- Adhesive tape (to fix the diffuser)

[1] A powerful drill is needed to cut clean holes

Appendix C

Engineering Drawings

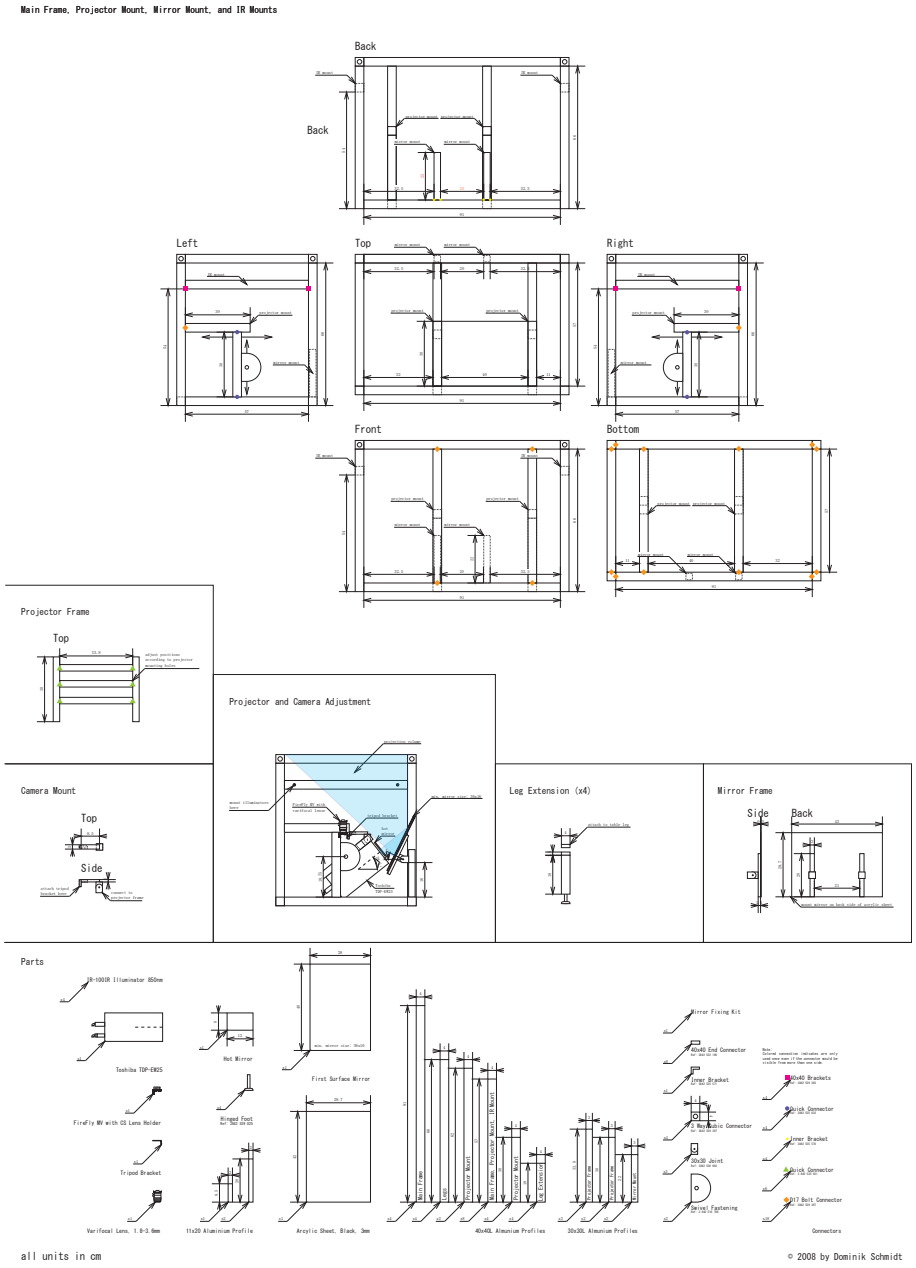

Figure C.1: Drawing of frame with camera, projector, and IR mounts

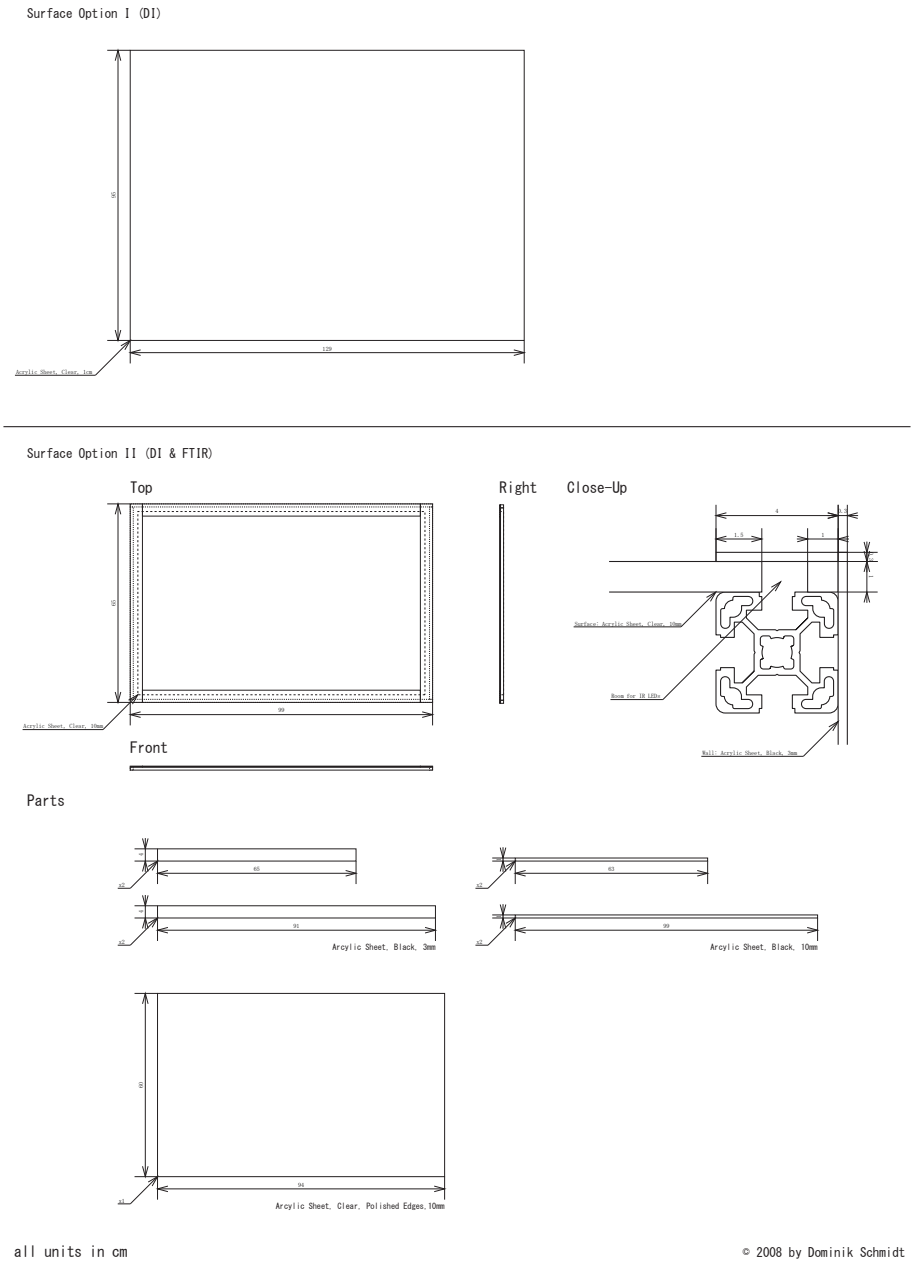

Figure C.2: Drawing of surface options for DI and FTIR setups

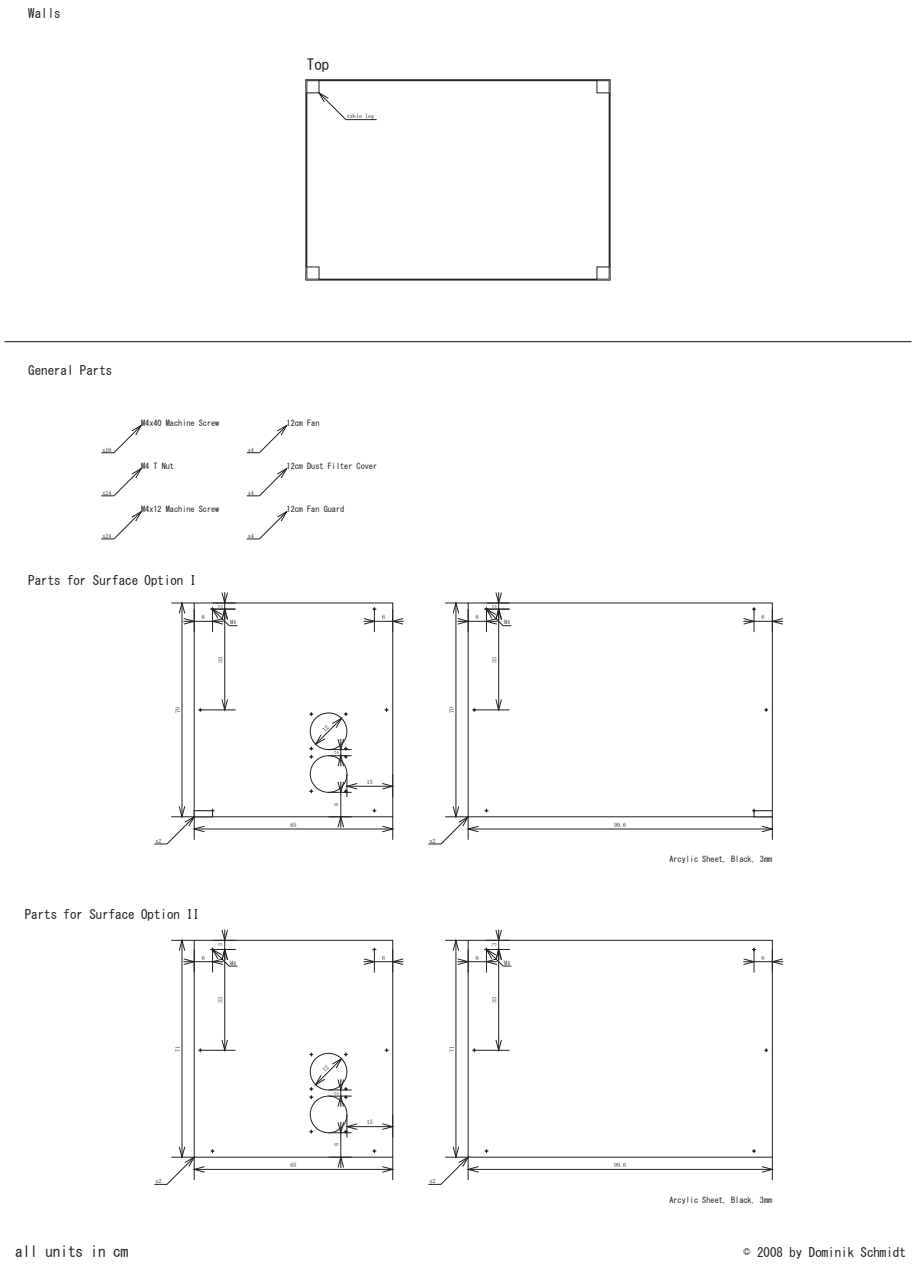

Figure C.3: Drawing of walls

Appendix D

Summarized Parts List

Note: Quantity refers to the actually required number of parts and does not reflect items sold in packages.

Quantity	Make	Item	Function	Supplier	Reference #
4	kjn	40x40L profile, 910mm	top/bottom frame	kjn	KJN 993 120
4	kjn	40x40L profile, 660mm	legs	kjn	KJN 993 120
2	kjn	40x40L profile, 620mm	projector support mount	kjn	KJN 993 120
8	kjn	40x40L profile, 570mm	top/bottom frame, IR & projector mount	kjn	KJN 993 120
4	kjn	40x40L profile, 300mm	projector mount	kjn	KJN 993 120
4	kjn	40x40L profile, 180mm	leg extension	kjn	KJN 993 120
3	kjn	30x30L profile, 338mm	projector frame	kjn	KJN 990 720
2	kjn	30x30L profile, 300mm	projector frame	kjn	KJN 990 720
2	kjn	30x30L profile, 220mm	mirror mount	kjn	KJN 990 720
1	Bosch Rexroth	11x20 profile, 85mm	camera mount	kjn	3 842 992 476
2	Bosch Rexroth	11x20 profile, 200mm	mirror mount	kjn	3 842 992 476
4	Bosch Rexroth	40x40 3 way cubic connector	top frame	kjn	3 842 529 397
18	Bosch Rexroth	D17 bolt connector	bottom frame, projector (support) mount	kjn	3 842 535 620
4	Bosch Rexroth	Quick connector 10mm	projector support mount	kjn	3 842 535 633
6	Bosch Rexroth	Quick connector 8mm	projector support mount	kjn	3 842 535 631
4	Bosch Rexroth	40x40 end connector	leg extensions	kjn	3 842 532 196
4	Bosch Rexroth	40x40 bracket with fittings	IR mount	kjn	3 842 529 383
3	Bosch Rexroth	Inner bracket 10 mm with fixings	camera mount, fan controller mount	kjn	3 842 535 571
4	Bosch Rexroth	Inner bracket 8-10mm with fixings	frame mount connection	kjn	3 842 535 576
2	Bosch Rexroth	Swivel fastening	frame mount connection	kjn	3 842 516 706
3	Bosch Rexroth	30x30 joint with fastenings	camera mount, mount acrylic connection	kjn	3 842 502 683
3	Bosch Rexroth	M4 T nut 8mm	frame projector connection	kjn	KJN 501 751
24	Bosch Rexroth	M4 T nut 10mm	wall mount	kjn	KJN 530 281
12	Bosch Rexroth	M5 T nut 10mm	illuminator mount	kjn	KJN 530 283
4	Bosch Rexroth	Hinged foot	feet	kjn	3 842 529 025
3–6	n/a	M4 washer	frame projector connection	RS Components	189-636
24	n/a	Machine screw M4x12	wall mount	Screwfix	28806
19	BZP	Cap screw M4x40	frame projector connection, fan mount	RS Components	483-8253
12	n/a	Cap screw M5x16	illuminator mount	Screwfix	77044
1	Fischer	Mirror fixing kit	acrylic mirror connection	Screwfix	46116
16	BZP	M4 nut	fan mount	Screwfix	13138
2	n/a	Brackets	PSU mount	n/a	n/a
2	n/a	Acrylic sheet, 420 × 297 × 3mm	mirror mount, additional illuminators	Retail Engineering Design	n/a
1	n/a	Acrylic sheet, clear, 1290 × 950 × 10mm	surface (option I)	Alternative Plastic	n/a
2	n/a	Acrylic sheet, 650 × 700 × 3mm	wall (option I)	Alternative Plastic	n/a
2	n/a	Acrylic sheet, 996 × 700 × 3mm	wall (option I)	Alternative Plastic	n/a
1	n/a	Acrylic sheet, clear, 940 × 600 × 10mm	surface (option II)	Alternative Plastic	n/a
2	n/a	Acrylic sheet, 650 × 710 × 3mm	wall (option II)	Alternative Plastic	n/a
2	n/a	Acrylic sheet, 996 × 710 × 3mm	wall (option II)	Alternative Plastic	n/a
2	n/a	Acrylic sheet, 990 × 10 × 10mm	rim (option II)	Alternative Plastic	n/a
2	n/a	Acrylic sheet, 630 × 10 × 10mm	rim (option II)	Alternative Plastic	n/a
2	n/a	Acrylic sheet, 910 × 40 × 3mm	rim (option II)	Alternative Plastic	n/a
2	n/a	Acrylic sheet, 650 × 40 × 3mm	rim (option II)	Alternative Plastic	n/a
1	Sihl	Polyester Film Matt, 1270 × 20	diffuser	Image2Output	3826127020
4	n/a	Cardboard sheet, A1, white	wall cover	The Paper Mill Shop	n/a
2	n/a	Cardboard sheet, A1, black	floor cover	The Paper Mill Shop	n/a
1	Toshiba	TDP-EW25	projector	E-Plenish	1453303
1	Knight Optical	Hot mirror, 120 × 80mm	Knight Optical	730FHQ12080-C	
1	Point Grey	Firefly MV camera	camera	Point Grey	n/a
1	Knight Optical	IR band-pass filter 850nm	visible light block	Knight Optical	850FAP5050
1	Knight Optical	First surface mirror, 400 × 280 × 3mm	mirror	Knight Optical	MGE400280-C
1	Edmund Optics	Varifocal 1.8-3.6mm lens	lens	Edmund Optics	NT55-254
4	n/a	IR illuminators, 99 LEDs, 850nm	main illuminators	RF Concepts Ltd	1781
12	Vishay	IR LEDs, 850nm	additional illuminators	Farnell	TSHA5201
1	n/a	Wire lead	current supply	n/a	n/a
8	Pro Power	Fan power power connectors	current supply	Farnell	CS11200
4	Kaze Jyuni	Fan 120mm	fan	QuietPC	n/a
4	Fansis	Dust filter 120mm	outer fan protection	QuietPC	n/a
4	n/a	Fan guard 120mm	inner fan protection	QuietPC	n/a
1	Xilence	PC powers supply unit (PSU)	powering IR and fans	QuietPC	XP420-12R
1	Zalman	Fan controller	driving fans	QuietPC	ZM-MFC2

Table D.2: Summarized parts list

List of Figures

List of Tables

Bibliography

[1] J. Y. Han. Low-cost multi-touch sensing through frustrated total internal reflection. In *UIST '05: Proceedings of the 18th annual ACM symposium on User interface software and technology*, pages 115–118, New York, NY, USA, 2005. ACM Press.

[2] J. Schöning, P. Brandl, F. Daiber, F. Echtler, O. Hilliges, J. Hook, M. Löchtefeld, N. Motamedi, L. Muller, P. Olivier, T. Roth, and U. von Zadow. Multi-touch surfaces: A technical guide. Technical report, 2008.